OWAtecta cleanRoom: standard system U

Single and double leaf door cross section

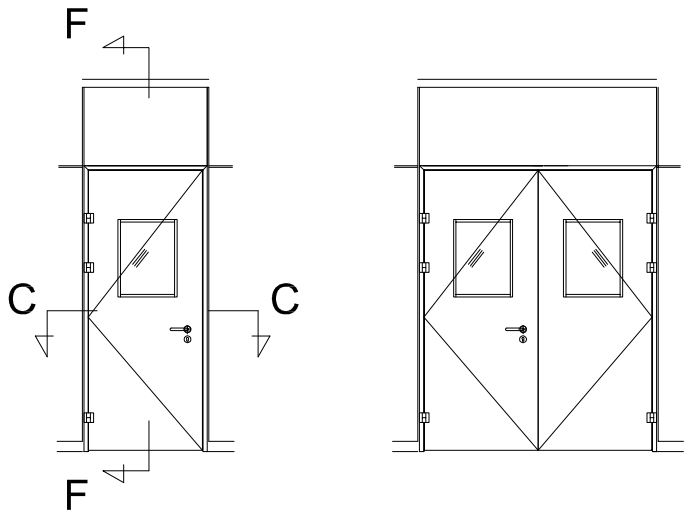

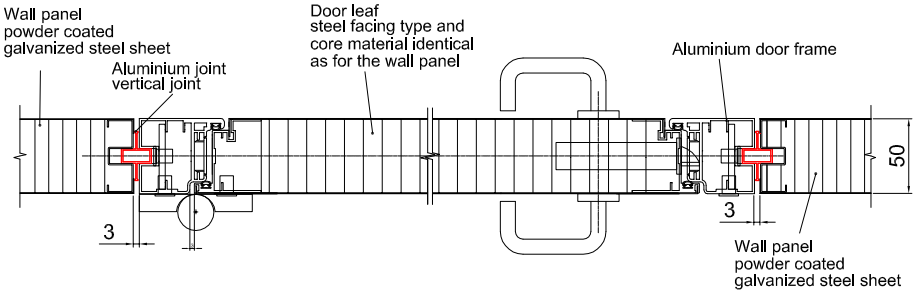

C-C

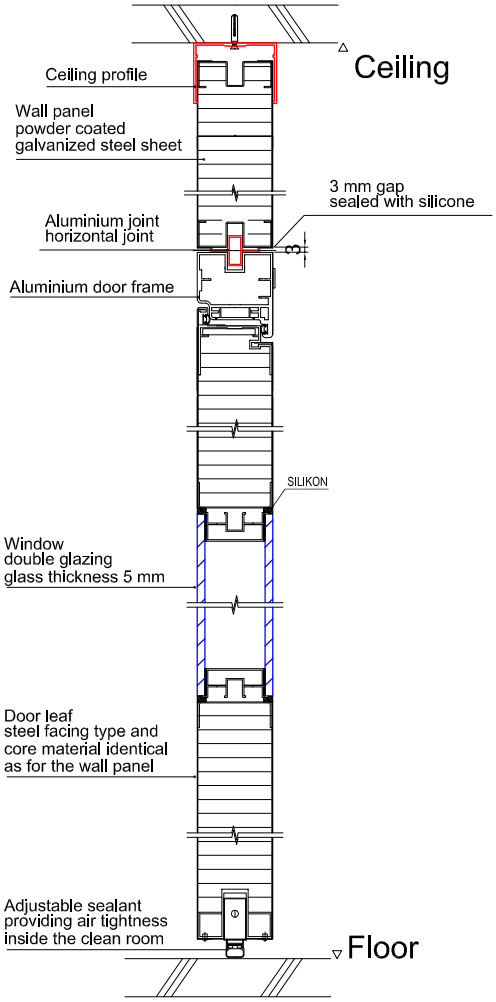

F-F